Connections

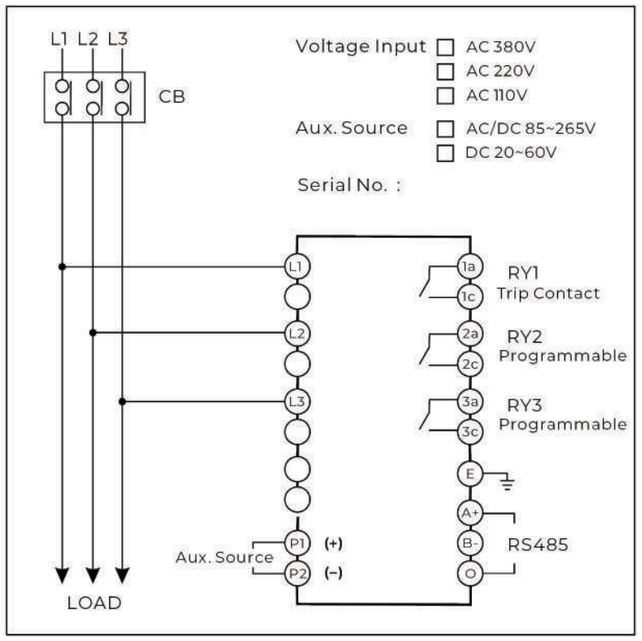

3 Phase 3 Wire

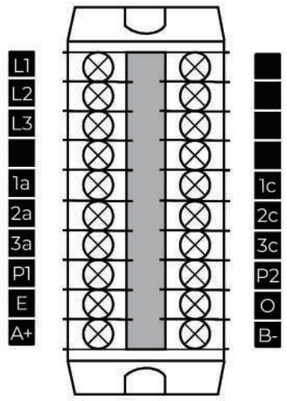

Wiring screw terminals

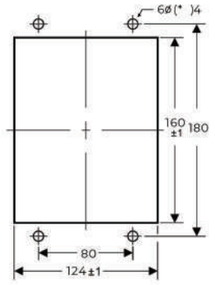

Panel Cut-Out

Dimensions (Unit: mm)

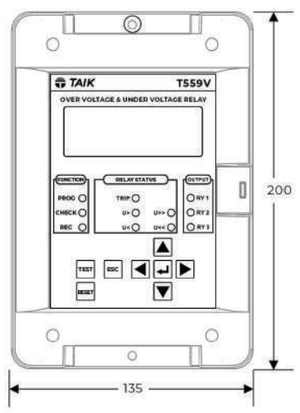

Front view

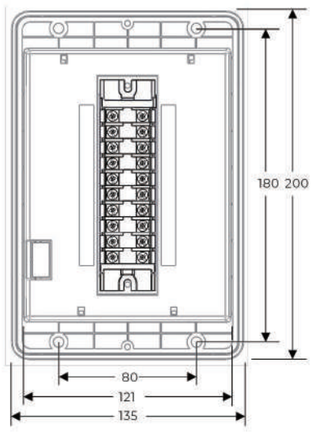

Rear view

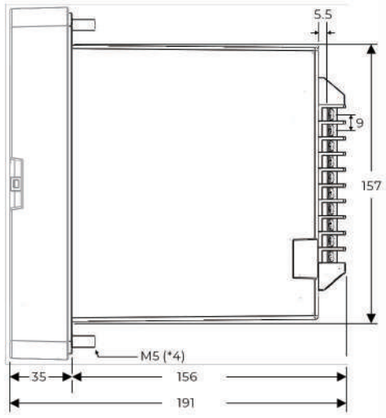

Side view

Product Code T5-PROTECH Series, Protection Relay
Code No. T559V

TAIK ELECTRIC CO., LTD.
TEL 886-(02)-2242-6825 | FAX 886-(02)-2242-6827
E-mail taikco@ms15.hinet.net

ISO 9001 Quality Management FM 40649 CE

www.taik.com.tw

TAIK ELECTRIC
Protection Solutions

WITHDRAWABLE UV & OV PROTECTION RELAY

The perfect
integration in
reliability & durability



T5-PROTECH
SERIES T559V

- Withdrawable design for fast maintenance and replacement
- Multiple protection curves for flexible coordination
- Comprehensive protection functions (27 / 59 / 47 / 86)
- Programmable settings and user-friendly interface
- Event logging and fault indication

T5-PROTECH Series, Protection Relay

TAIK ELECTRIC

Pricing Competitiveness

Dependability

Safety

Precision

Simplicity

Easy Setup

T559V includes essential functions to safeguard power system from abnormal voltage fluctuation, insulation breakdown, overheating, voltage collapse, switching surge, and power system instability.

In addition, the T559V supports multiple protection curves, programmable settings, self-diagnostics, tripping events, logging events, and faulty indication. It also provides a robust, versatile, and user-friendly protection solutions.

T559V is particularly suitable for operation in power distribution, motor protection, and industrial networks, where voltage stability and selectivity are critical.

Deploying T559V is just a safe & reliable guarantee which ensures the essentials of the protection functions for proper operation in medium and low voltage networks.

Diversities

- Multiple curves selection
- 11 status LED indicators/8 push buttons
- 40 fault records with date/time stamping
- 100 logging events with data/time stamping
- High brightness 20 x 4 characters LCD display
- Auto self-diagnostics for monitoring internal errors
- Running hour accumulation while the relay startup
- Phase sequence voltage (phase reversal) detection
- 3 outputs (NO relay contacts) available for configuring as latching or pulse mode
- RTC-based current time display with selectable formats
- Fast and easy disconnection from the base unit for maintenance and retrofit
- Unique design in interlocking mechanism for open-circuit protection
- Robust enclosure in combination of a rigid plastic and a zinc-plated steel
- Measurements to be indicated via selecting either percentage or voltage

Protection Functions

27 Instantaneous & Time-delay undervoltage

47 Negative phase sequence (Phase unbalance)

86 Lockout

59 Instantaneous & Time-delay overvoltage

47 Phase sequence voltage (Phase reversal)

Standards Compliance

Electromagnetic compatibility (EMC)	Directive 2014/30/EU
Product safety requirement	IEC 60255-27
Electrostatic discharge	IEC 61000-4-2 (IEC 60255-26)
Electromagnetic field immunity	IEC 61000-4-3 (IEC 60255-26)
Electrical fast transient/burst immunity	IEC 61000-4-4 (IEC 60255-26)
Surge immunity	IEC 61000-4-5 (IEC 60255-26)
Immunity to conducted disturbances	IEC 61000-4-6 (IEC 60255-26)
Power frequency magnetic field immunity	IEC 61000-4-8 (IEC 60255-26)
Short interruptions and voltage	IEC 61000-4-11(IEC 60255-26)
Radiated emission	CISPR 11/22 (IEC 60255-26)
Conducted emission	CISPR 22 (IEC 60255-26)
Vibration	IEC 60255-21-1
Shock and bump	IEC 60255-21-2
Cyclic temperature with humidity	IEC 60068-2-30 (IEC 60255-1)
Certificate	CE

Applications

- MV/LV power networks
- Backup in MV power systems
- Industrial MV power distribution networks
- Buildings in MV power systems
- Public distribution networks and substations

Technical Data

ANSI Protection functions	27 Instantaneous & Time-delay undervoltage, 59 Instantaneous & Time-delay overvoltage, 47 Negative phase sequence (Phase unbalance), 47 Phase sequence voltage (Phase reversal), 86 Lockout
Operating curve types	IDMTA – UV/OV Characteristic, IDMTB – UV/OV Characteristic Definite time (DTL: 0.03~640.00 Sec.)

▪ 59 (OV) Setting range of pick-up voltage

59 (Low-Set)	5 ~ 200% (1% step)
59 (High-Set)	10 ~ 250 % (1% step)
59 (High-Set) with selected definite time	30 ~ 200ms

Operating curve types

27 (UV) $t=(B/(1 - (V/Vset)^A) +C)*tp$

IDMTA:A:1,B:1,C:0 / IDMTB:A:2,B:0.15,C:0.25

59 (OV) $t=(B/((V/Vset)^A -1) +C)*tp$

IDMTA:A:1,B:1,C:0 / IDMTB:A:2,B:12.15,C:0.25

▪ 27 (UV) Setting range of pick-up voltage

27 (Low-Set)	5 ~ 120% (1% step)
27 (High-Set)	5 ~ 120 % (1% step)
27 (High-Set) with selected definite time	30~200ms

▪ 47 (NPS) Setting range of pick-up NPS voltage

47 (NPS) Phase unbalance trip	3 ~ 50% (1% step)

Input voltage	AC 380V, 220V, 110V
Sampling rate	True RMS, 64 samples per cycle
Definite Time Lag (DTL) setting	0.03~64.00 in step of 0.01 sec
Pick-up voltage level	100 ~ 115 % of the set voltage
Reset time	Voltage level drops below the pickup level
Reset ratio	>98%
Operation accuracy	±3% of the set voltage(70~200%)
Operation time accuracy	the set time delay, ±3% or ±20ms
Relay contacts	3 N.O. contacts, AC 250V 5A, DC 24V 5A (Configurable for latching or pulse mode)
Auxiliary power supply	AC/DC 85 ~ 265V 50/60Hz, DC 20-60V (option)
Power consumption	≦ 6VA
Backlit LCD display	High brightness LCD 20 x 4 characters
LED indicators	Indication designated individually for trip, program, check, record, U>, U >>, U<, U<<, RY1, RY 2, RY 3
Communication interface	MODBUS RTU, RS485
Operating temperature	0 ~ 60 °C
Storage temperature	-10 ~ 70 °C
Max. relative humidity	95%
IP enclosure	IP 52 (front plate), IP 30 (rear)
Flammability of enclosures	UL 94 V-0
Tripping event records	40 tripping event records with date/time stamping
Logging event records	100 logging event records with date/time stamping